Frese Frontali e a Disco

Shell End Mills and Side Milling Cutters

080F
Fresa frontale a sgrossare
Shell end mills for roughing
→ 268

180
Fresa frontale a finire
Shell end mills for finishing
→ 268

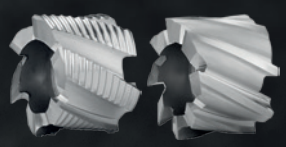

101
Fresa a disco a denti alternati
Side milling cutter with staggered teeth
→ 269

102
Fresa a disco a denti diritti
Side milling cutter with straight teeth
→ 271

10E
Fresa semicircolare
Half circle cutter
→ 272

10F
Fresa semicircolare
Half circle cutter
→ 273

10A
Frese ad angolo
Double angle cutter
→ 273

10B
Fresa ad angolo
Double angle cutter
→ 274

SIL SERVICE

L'esperienza Silmax dimostra che un utensile correttamente affilato ha un rendimento uguale a quello nuovo.

Silmax experience shows that a properly sharpened tool grants the same performances of a new tool.

Riaffilatura e rigenerazione
Resharpening and Reconditioning

Esecuzione perfetta
Perfect Execution

Rivestimento PVD
PVD Coating

Trattamento 4S
4S Treatment

Consegna rapida
Fast Delivery

221 PM Frese in Acciaio Sinterizzato / Powder Metal End Mills
231 SGR Frese a Sgrossare in HSSCo8 / Roughing End Mills in HSSCo8
243 FIN Frese a Finire in HSSCo8 / Finishing End Mills in HSSCo8
267 FRF Frese Frontali e a Disco / Shell End Mills and Side Milling Cutters
277 ALT Altre Frese / Other mills

080F

Fresa frontale a sgrossare
Shell end mill for roughing

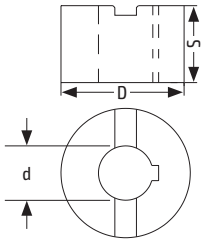

HSS Co8 | NRF F Form | ISO 2586 | DIN 1880 | DIN 841 | λ 30° γ 12°

1 2 4 5 7

D k12	S k12	d h7	Din	Z	Non rivestito Uncoated	Balinit® Alcrona
40,0	32,0	16	1880	6	SIL08F040	NIG08F040
40,0	40,0	16	841	6	SIL08F404	NIG08F404
50,0	36,0	22	1880	6	SIL08F050	NIG08F050
50,0	50,0	22	841	6	SIL08F505	NIG08F505
60,0	60,0	27	841	8	SIL08F606	NIG08F606
63,0	40,0	27	1880	8	SIL08F063	NIG08F063
75,0	75,0	27	841	10	SIL08F757	NIG08F757
80,0	45,0	27	1880	10	SIL08F080	NIG08F080
100,0	50,0	32	1880	10	SIL08F100	NIG08F100
125,0	56,0	40	1880	12	SIL08F125	NIG08F125

180

Fresa frontale a finire
Shell end mill for finishing

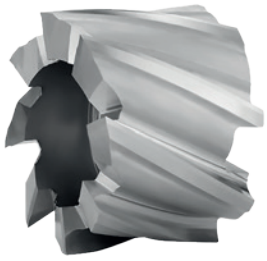

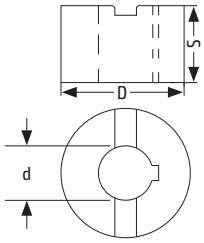

HSS Co8 | NS | ISO 2586 | DIN 1880 | DIN 841 | λ 30° γ 12°

1 2 4 5 7

D k10	S k12	d h7	Din	Z	Non rivestito Uncoated	Balinit® Alcrona
40,0	32,0	16	1880	6	SIL180040	NIG180040
40,0	40,0	16	841	6	SIL180404	NIG180404
50,0	36,0	22	1880	8	SIL180050	NIG180050
50,0	50,0	22	841	8	SIL180505	NIG180505
60,0	60,0	27	841	8	SIL180606	NIG180606
63,0	40,0	27	1880	8	SIL180063	NIG180063
75,0	75,0	27	841	8	SIL180757	NIG180757
80,0	45,0	27	1880	10	SIL180080	NIG180080
100,0	50,0	32	1880	10	SIL180100	NIG180100
125,0	56,0	40	1880	12	SIL180125	NIG180125
160,0	63,0	50	1880	14	SIL180160	NIG180160

Notes

101

Fresa a disco a denti alternati
Side milling cutter
with staggered teeth

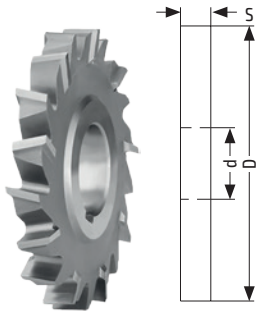

HSS Co | ISO 2587 | DIN 885A | λ 12° γ 10°

1 2 4 5 7

D js16	S k11	d h7	Z	Non rivestito Uncoated
50,0	3,0	16	14	SIL101103
50,0	4,0	16	14	SIL101104
50,0	5,0	16	14	SIL101105
50,0	6,0	16	14	SIL101106
50,0	7,0	16	14	SIL101107
50,0	8,0	16	14	SIL101108
50,0	9,0	16	14	SIL101109
50,0	10,0	16	14	SIL101110
63,0	3,0	22	16	SIL101203
63,0	4,0	22	16	SIL101204
63,0	5,0	22	16	SIL101205
63,0	6,0	22	16	SIL101206
63,0	7,0	22	14	SIL101207
63,0	8,0	22	14	SIL101208
63,0	9,0	22	14	SIL101209
63,0	10,0	22	14	SIL101210
63,0	12,0	22	14	SIL101212
63,0	14,0	22	16	SIL101214
80,0	3,0	27	18	SIL101303
80,0	4,0	27	18	SIL101304
80,0	5,0	27	18	SIL101305
80,0	6,0	27	18	SIL101306
80,0	7,0	27	16	SIL101307
80,0	8,0	27	16	SIL101308
80,0	9,0	27	16	SIL101309
80,0	10,0	27	16	SIL101310
80,0	12,0	27	16	SIL101312
80,0	14,0	27	16	SIL101314
80,0	16,0	27	16	SIL101316
100,0	3,0	32	22	SIL101403
100,0	4,0	32	22	SIL101404
100,0	5,0	32	22	SIL101405
100,0	6,0	32	22	SIL101406
100,0	7,0	32	18	SIL101407
100,0	8,0	32	18	SIL101408
100,0	9,0	32	18	SIL101409
100,0	10,0	32	18	SIL101410
100,0	12,0	32	18	SIL101412
100,0	14,0	32	18	SIL101414
100,0	16,0	32	18	SIL101416

1 Acciaio Steel | 2 Ghise Cast Iron | 3 Acciai Temprati Hardened Steel | 4 Acciaio Inox Stainless Steel | 5 Titanio Titanium | 6 Leghe Leggere Light Alloys | 7 PH Duplex | 8 Superleghe Superalloys | 9 Compositi Composite Materials | → 16 Guida alla lettura Reading guide | → 18 Legenda Legend

101

Fresa a disco a denti alternati
Side milling cutter
with staggered teeth

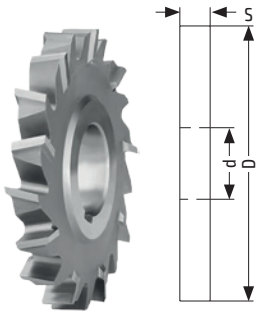

HSS Co | ISO 2587 | DIN 885A | λ 12° γ 10°

1 2 4 5 7

D js16	S k11	d h7	Z	Non rivestito Uncoated
125,0	4,0	32	24	SIL101504
125,0	5,0	32	24	SIL101505
125,0	6,0	32	24	SIL101506
125,0	7,0	32	20	SIL101507
125,0	8,0	32	20	SIL101508
125,0	10,0	32	20	SIL101510
125,0	12,0	32	20	SIL101512
125,0	14,0	32	20	SIL101514
125,0	16,0	32	20	SIL101516
125,0	18,0	32	20	SIL101518
125,0	20,0	32	20	SIL101520
160,0	5,0	40	26	SIL101605
160,0	6,0	40	26	SIL101606
160,0	7,0	40	26	SIL101607
160,0	8,0	40	26	SIL101608
160,0	10,0	40	22	SIL101610
160,0	12,0	40	22	SIL101612
160,0	14,0	40	22	SIL101614
160,0	16,0	40	24	SIL101616
160,0	18,0	40	24	SIL101618
160,0	20,0	40	22	SIL101620

Notes

102

Fresa a disco a denti diritti
Side milling cutter
with straight teeth

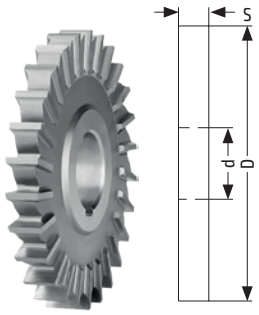

HSS Co | ISO 2587 | DIN 885B | λ 0° γ 10°

1 2 4 5 7

D js16	S k11	d h7	Z	Non rivestito Uncoated
63,0	4,0	22	22	SIL102204
63,0	5,0	22	22	SIL102205
63,0	6,0	22	22	SIL102206
63,0	8,0	22	22	SIL102208
63,0	10,0	22	22	SIL102210
63,0	12,0	22	20	SIL102212
63,0	14,0	22	20	SIL102214
80,0	6,0	27	24	SIL102306
80,0	8,0	27	24	SIL102308
80,0	10,0	27	24	SIL102310
80,0	12,0	27	24	SIL102312
80,0	14,0	27	20	SIL102314
80,0	16,0	27	20	SIL102316
100,0	6,0	27	26	SIL102406
100,0	8,0	27	26	SIL102408
100,0	10,0	27	26	SIL102410
100,0	12,0	27	26	SIL102412
100,0	14,0	27	22	SIL102414
100,0	16,0	27	22	SIL102416
125,0	10,0	32	30	SIL102510
125,0	12,0	32	24	SIL102512
125,0	14,0	32	24	SIL102514
125,0	16,0	32	24	SIL102516
125,0	18,0	32	24	SIL102518
125,0	20,0	32	24	SIL102520

1 Acciaio Steel | 2 Ghise Cast Iron | 3 Acciai Temprati Hardened Steel | 4 Acciaio Inox Stainless Steel | 5 Titanio Titanium | 6 Leghe Leggere Light Alloys | 7 PH Duplex | 8 Superleghe Superalloys | 9 Compositi Composite Materials | → 16 Guida alla lettura Reading guide | → 18 Legenda Legend

10E

Fresa semicircolare
Half circle cutter

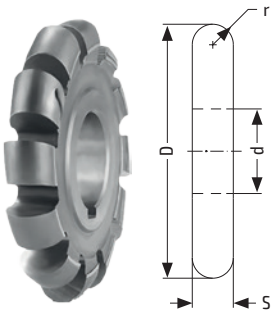

HSS Co8 | ISO 3860 | DIN 856 | λ 0° γ 8°

1 2 4 5 7

r h11	D js16	S	d h7	Z	Non rivestito Uncoated
2,0	50,0	4,0	16	14	SIL10E502
2,5	63,0	5,0	22	12	SIL10E625
3,0	63,0	6,0	22	12	SIL10E603
3,5	63,0	7,0	22	12	SIL10E635
4,0	63,0	8,0	22	12	SIL10E604
4,5	63,0	9,0	22	12	SIL10E645
5,0	63,0	10,0	22	12	SIL10E605
5,5	80,0	11,0	27	12	SIL10E855
6,0	80,0	12,0	27	12	SIL10E806
6,5	80,0	13,0	27	12	SIL10E865
7,0	80,0	14,0	27	12	SIL10E807
7,5	80,0	15,0	27	12	SIL10E875
8,0	80,0	16,0	27	12	SIL10E808
8,5	100,0	17,0	32	12	SIL10E185
9,0	100,0	18,0	32	12	SIL10E109
9,5	100,0	19,0	32	12	SIL10E195
10,0	100,0	20,0	32	12	SIL10E110

Notes

10F

Fresa semicircolare
Half circle cutter

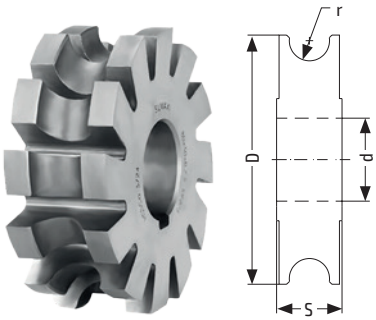

HSS Co8 | ISO 3860 | DIN 885A | λ 0° γ 8°

1 2 4 5 7

r h11	D js16	S	d h7	Z	Non rivestito Uncoated
2,0	50,0	9,0	16	14	SIL10F502
2,5	63,0	10,0	22	12	SIL10F625
3,0	63,0	12,0	22	12	SIL10F603
3,5	63,0	14,0	22	12	SIL10F635
4,0	63,0	16,0	22	12	SIL10F604
4,5	63,0	18,0	22	12	SIL10F645
5,0	63,0	20,0	22	12	SIL10F605
5,5	80,0	22,0	27	12	SIL10F855
6,0	80,0	24,0	27	12	SIL10F806
6,5	80,0	26,0	27	12	SIL10F865
7,0	80,0	28,0	27	12	SIL10F807
7,5	80,0	30,0	27	12	SIL10F875
8,0	80,0	32,0	27	12	SIL10F808
8,5	100,0	34,0	32	12	SIL10F185
9,0	100,0	34,0	32	12	SIL10F109
9,5	100,0	36,0	32	12	SIL10F195
10,0	100,0	36,0	32	12	SIL10F110

10A

Fresa ad angolo
Double angle cutter

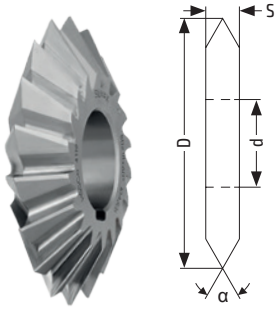

HSS Co8 | ISO 6108 | DIN 847 | λ 0° γ 0°

1 2 4 5 7

α ± 30'	D js16	S js16	d h7	Z	Non rivestito Uncoated
45°	50,0	8,0	16	16	SIL10A504
45°	63,0	10,0	22	18	SIL10A634
45°	80,0	12,0	27	18	SIL10A804
45°	100,0	18,0	32	20	SIL10A104
60°	50,0	10,0	16	16	SIL10A506
60°	63,0	14,0	22	18	SIL10A636
60°	80,0	18,0	27	18	SIL10A806
60°	100,0	25,0	32	20	SIL10A106
90°	50,0	14,0	16	16	SIL10A509
90°	63,0	20,0	22	18	SIL10A639
90°	80,0	22,0	27	18	SIL10A809
90°	100,0	32,0	32	20	SIL10A109

1 Acciaio Steel	2 Ghise Cast Iron	3 Acciai Temprati Hardened Steel	4 Acciaio Inox Stainless Steel	5 Titanio Titanium	6 Leghe Leggere Light Alloys	7 PH Duplex	8 Superleghe Superalloys	9 Compositi Composite Materials	→ 16 Guida alla lettura Reading guide	→ 18 Legenda Legend

10B

Fresa ad angolo
Double angle cutter

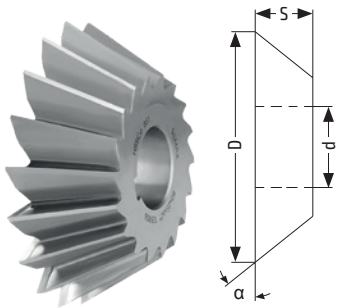

HSS Co8 | DIN 842A | λ 0° γ 3°

1 2 4 5 7

α ± 30'	D js16	S js16	d h7	Z	Non rivestito Uncoated
45°	40,0	10,0	10	14	SIL10B404
45°	50,0	13,0	13	16	SIL10B504
45°	63,0	18,0	16	16	SIL10B634
45°	80,0	22,0	22	18	SIL10B804
45°	100,0	28,0	27	20	SIL10B104
50°	40,0	13,0	10	14	SIL10B405
50°	50,0	16,0	13	16	SIL10B505
50°	63,0	20,0	16	16	SIL10B635
50°	80,0	25,0	22	18	SIL10B805
50°	100,0	32,0	27	20	SIL10B105
60°	40,0	13,0	10	14	SIL10B406
60°	50,0	16,0	13	16	SIL10B506
60°	63,0	20,0	16	16	SIL10B636
60°	80,0	25,0	22	18	SIL10B806
60°	100,0	32,0	27	20	SIL10B106

Notes

180/080F

Parametri di lavoro / Working Parameters

	m/min →	VC=30-35	VC=25-30	VC=20-25	VC=15-20	VC=15-20	VC=45-50	VC=60-80
	D [mm] ↓	Acciaio / Steel ≤ 800 N/mm²	Acciaio / Steel ≤ 1000 N/mm²	Acciaio / Steel ≤ 1300 N/mm²	Acciaio inossidabile Stainless Steel	Titanio Titanium	Rame e leghe Copper & Alloys	Alluminio e leghe Aluminum & Alloys
fz [mm]	32,0	0,060	0,060	0,060	0,060	0,060	0,060	0,060
	40,0	0,065	0,065	0,065	0,065	0,065	0,065	0,065
	50,0	0,070	0,070	0,070	0,070	0,070	0,070	0,070
	60,0	0,080	0,080	0,080	0,080	0,080	0,080	0,080
	80,0	0,100	0,100	0,100	0,100	0,100	0,100	0,100
	100,0	0,120	0,120	0,120	0,120	0,120	0,120	0,120
	125,0	0,130	0,130	0,130	0,130	0,130	0,130	0,130
	160,0	0,140	0,140	0,140	0,140	0,140	0,140	0,140

101/102

Parametri di lavoro / Working Parameters

	m/min →	Vc=30-35	Vc=25-30	Vc=20-25	Vc=15-20	Vc=15-20	Vc=45-50	Vc=60-80
	D [mm] ↓	Acciaio / Steel ≤ 800 N/mm²	Acciaio / Steel ≤ 1000 N/mm²	Acciaio / Steel ≤ 1300 N/mm²	Acciaio inossidabile Stainless Steel	Titanio Titanium	Rame e leghe Copper & Alloys	Alluminio e leghe Aluminum & Alloys
fz [mm]	50,0	0,060	0,060	0,060	0,060	0,060	0,060	0,060
	63,0	0,070	0,070	0,070	0,070	0,070	0,070	0,070
	80,0	0,080	0,080	0,080	0,080	0,080	0,080	0,080
	100,0	0,090	0,090	0,090	0,090	0,090	0,090	0,090
	125,0	0,100	0,100	0,100	0,100	0,100	0,100	0,100
	160,0	0,120	0,120	0,120	0,120	0,120	0,120	0,120

10E/10F/10A/10B

Parametri di lavoro / Working Parameters

	m/min →	Vc=30-35	Vc=25-30	Vc=20-25	Vc=15-20	Vc=15-20	Vc=45-50	Vc=60-80
	D [mm] ↓	Acciaio / Steel ≤ 800 N/mm²	Acciaio / Steel ≤ 1000 N/mm²	Acciaio / Steel ≤ 1300 N/mm²	Acciaio inossidabile Stainless Steel	Titanio Titanium	Rame e leghe Copper & Alloys	Alluminio e leghe Aluminum & Alloys
fz [mm]	40,0	0,035	0,035	0,035	0,035	0,035	0,035	0,035
	50,0	0,045	0,045	0,045	0,045	0,045	0,045	0,045
	63,0	0,055	0,055	0,055	0,055	0,055	0,055	0,055
	80,0	0,065	0,065	0,065	0,065	0,065	0,065	0,065
	100,0	0,075	0,075	0,075	0,075	0,075	0,075	0,075
	125,0	0,085	0,085	0,085	0,085	0,085	0,085	0,085

1 Acciaio Steel | 2 Ghise Cast Iron | 3 Acciai Temprati Hardened Steel | 4 Acciaio Inox Stainless Steel | 5 Titanio Titanium | 6 Leghe Leggere Light Alloys | 7 PH Duplex | 8 Superleghe Superalloys | 9 Compositi Composite Materials | → 16 Guida alla lettura Reading guide | → 18 Legenda Legend

221 PM Frese in Acciaio Sinterizzato Powder Metal End Mills
231 SGR Frese a Sgrossare in HSSCo8 Roughing End Mills in HSSCo8
243 FIN Frese a Finire in HSSCo8 Finishing End Mills in HSSCo8
267 FRF Frese Frontali e a Disco Shell End Mills and Side Milling Cutters
277 ALT Altre Frese Other mills